FREELY PROGRAMMABLE ROTARY INDEXING TABLE CR-N 260
TECHNICAL DATA

INSPIRING PEOPLE
GREAT SOLUTIONS

Rotary Indexing Table solutions from WEISS fit seamlessly into the overall system. With their modular design, the freely programmable Rotary Indexing Tables enable quick adaptation to different requirements, short delivery times, and fast service times. The exterior geometry is optimized to minimize interfering contours and has a compact size. WEISS prepares controls such that no in-depth programming knowledge is required for start-up. Wherever digital services can support the user, WEISS offers them. The focus is on easy operation and start-up. With its market maturity, the fifth generation of Rotary Indexing Tables even comes with a simulation model in the ISG TwinStore, which supports virtual start-up and saves time accordingly. CAD data are available for download in the Cadenas PARTcommunity. And with the corresponding control solution, WEISS Rotary Indexing Tables automatically optimize themselves during the process.

The freely programmable CR-N Rotary Indexing Tables are particularly attractive for large-scale series production and flow manufacturing. The height of the indexers is the same across several series, and therefore no compensating elements are required.

For MORE Productivity
- 20 % more compact with the same level of performance
- 2 variants: “Precision” for maximum accuracy and “Dynamic” for the highest dynamics
- High-precision needle bearings to absorb maximum loads
- Lubricated for life to minimize maintenance costs

For MORE Flexibility
- 5 configuration options for motor and gearbox positions
- Different gear stages enable rotation time optimization
- Large center opening for easier feed-through of power and sensor cables
- Easy attachment of conventional motors thanks to the flexible adaptation concept

WEISS GmbH
Siemensstraße 17
74722 Buchen
Germany
Telephone +49 6281 52 08 0
Telefax +49 6281 52 08 99
Email info@weiss-world.com
weiss-world.com

WEISS Service
Email service@weiss-world.com
Telephone +49 6281 52 09 99

Trademarks
WEISS and the WEISS logo are registered trademarks of WEISS GmbH in Germany and other countries. Other designations used herein are trademarks of their respective owners.

For more details on CR-N 260, please visit weiss-world.com

Subject to technical modifications and other changes.

Downloads
WEISS CAD Download Portal

FREELY PROGRAMMABLE ROTARY INDEXING TABLE CR-N 260
TECHNICAL SPECIFICATIONS

SPECIFICATIONS		CR-N 260K (Precision)	CR-N 260S (Dynamic)
Indexing accuracy [1]	arcsec	80 (±40)	160 (±80)
Unidirectional repeat accuracy	arcsec	14 (±7)	16 (±8)
Output flange axial run-out at Ø 260 mm	mm	0.01	0.01
Output flange radial run-out at Ø 260 mm	mm	0.01	0.01
Recommended max. attachment diameter [2]	mm	1,600	1,600
Center opening	mm	50	50
Approx. total weight without motor	kg	88	88

OUTPUT FLANGE LOAD DATA

			Dynamic	Static
Max. axial force (standard / reinforced)	F_{2A}	N	16,000 / 20,000	32,000 / 40,000
Max. radial force (standard / reinforced)	F_{2R}	N	8,000 / 12,000	12,800
Max. tilting moment (standard / reinforced)	M_{2T}	Nm	1,500 / 1,900	2,000
Max. acceleration torque (CR-N K / CR-N S)	T_2	Nm	550 / 750	1,000 / 1,700

STATIONARY SECTION LOAD DATA

			Static
Max. axial force	F_{SA}	N	14,000
Max. radial force	F_{SR}	N	8,000
Max. tilting moment	M_{ST}	N	1,200
Max. torque	T_S	Nm	400

Output Flange Load Data

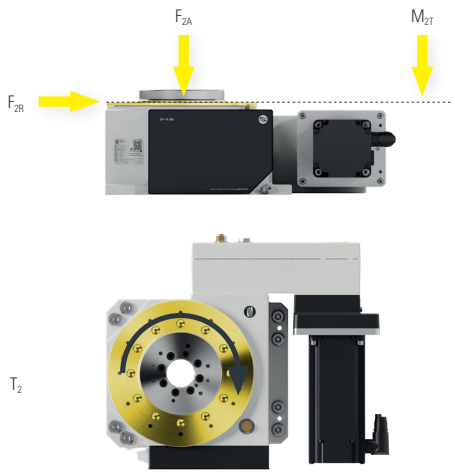

Stationary Section Load Data

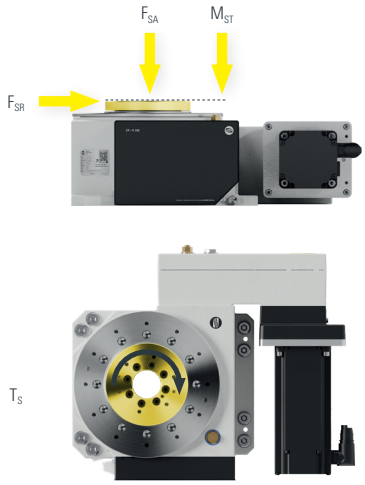

– The specifications are individual load specifications. Contact our Application Engineering department to check your application data for combined loads and process forces.
– Drive design optimization: Due to the different gear ratios, the drivetrain can be optimally designed for the application. For more information, see the type code.
– Recommended flatness of the connection design of 0.08 mm.

[1] It is optionally possible to improve the indexing precision by 30% with an additional encoder.
[2] Consult with WEISS if larger diameters are required.

FREELY PROGRAMMABLE ROTARY INDEXING TABLE CR-N 260
PHYSICAL DATA

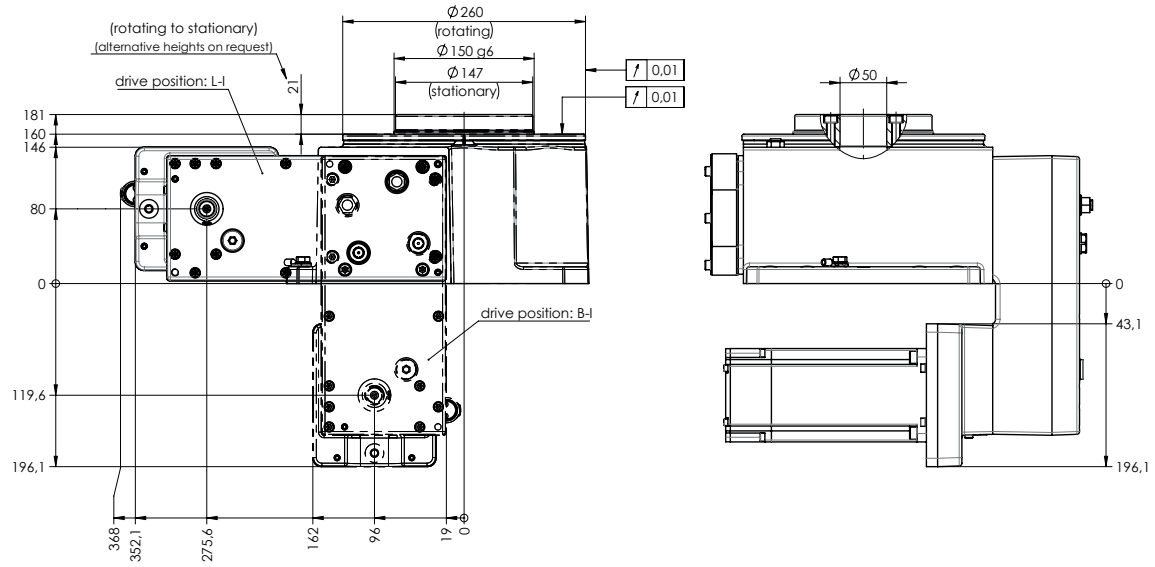

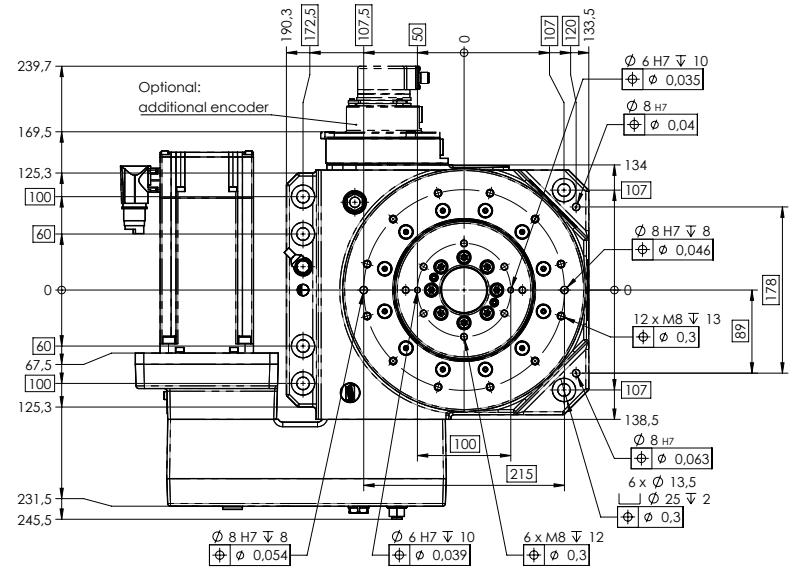

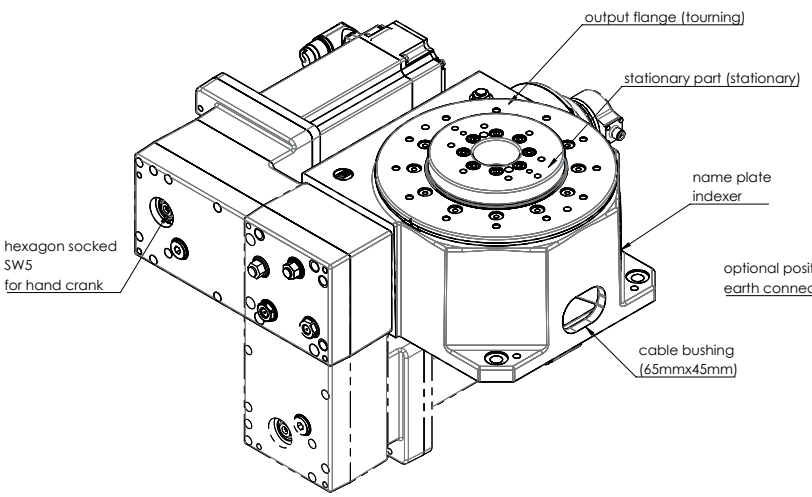

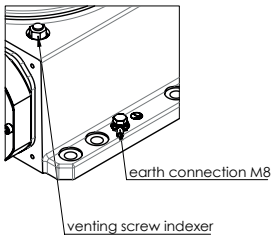

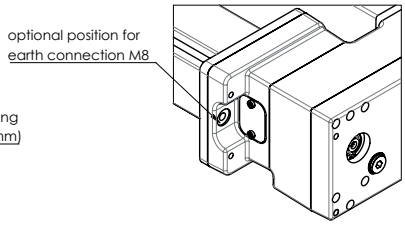

Please keep the motor and brake accessible for servicing. If the rotary table is recessed in the base plate, the pocket must be 15 mm larger on all sides than the outer contour of the table.

The installation of common alternative motors from various manufacturers is possible. The drive flange geometries depend on the motor.

FREELY PROGRAMMABLE ROTARY INDEXING TABLE CR-N 260
SERVICE POINTS

Side View

Side View

Isometric View

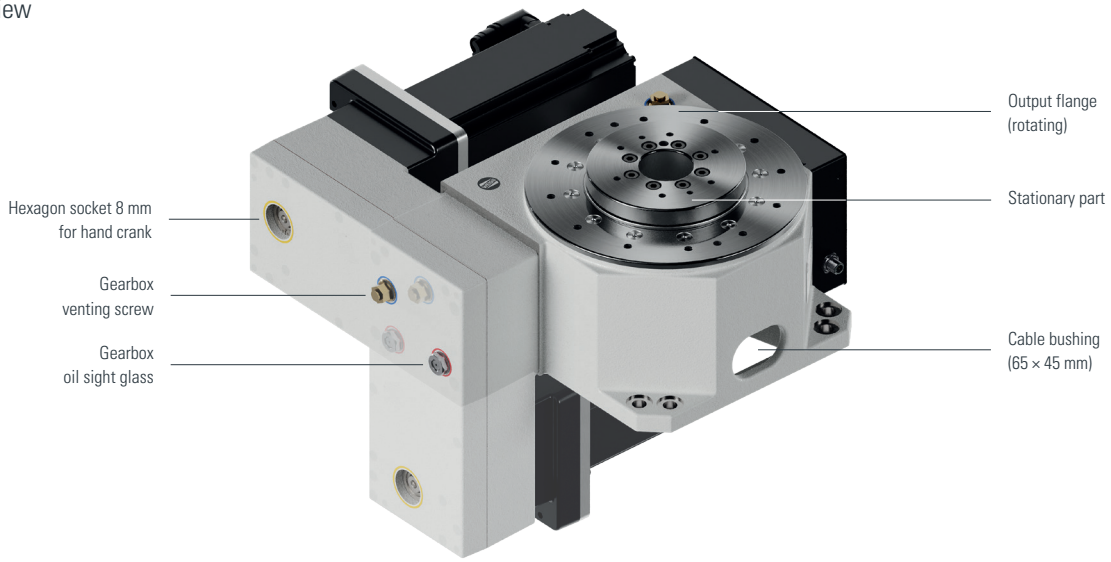

FREELY PROGRAMMABLE ROTARY INDEXING TABLE CR-N 260
VARIANTS

2 Variants – Different Applications

CR-N 260K Precision

CR-N 260S Dynamic

CR-N 260K Precision
The variants for applications that require maximum precision. Thanks to the special cam characteristic, the cam followers are mutually tensioned. Rotary Indexing Tables with this variant have above-average accuracy in any stopping position.

CR-N 260S Dynamic
Thanks to the higher torque, CR-N Rotary Indexing Tables in the Dynamic variant achieve significantly shorter rotation intervals without sacrificing any accuracy at all. The special arrangement of the cam followers in one direction ensures optimal power transmission.

Installation Positions – Alignments

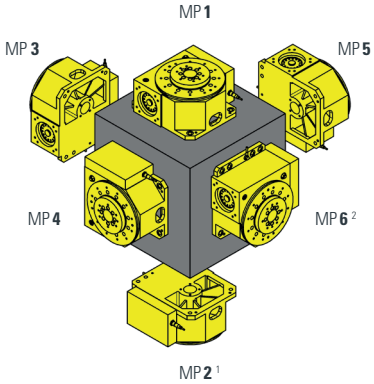

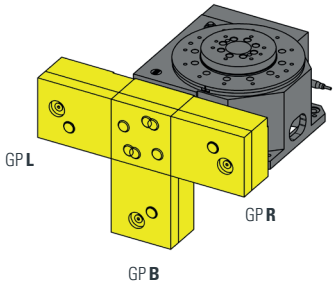

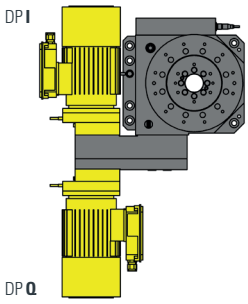

MOUNTING POSITION – MP		**GEARBOX POSITION** – GP		**DRIVE POSITION** – DP	
MP **1**	horizontal	GP **L**	left	DP **I**	inside
MP **2**	overhead [1]	GP **R**	right	DP **Q**	outside
MP **3**	vertical, gearbox right	GP **B**	below	–	–
MP **4**	vertical, gearbox below	–	–	–	–
MP **5**	vertical, gearbox above	–	–	–	–
MP **6**	vertical, gearbox left [2]	–	–	–	–

[1] Load data for overhead applications with guidance from WEISS.
[2] Only with guidance from WEISS.

VARIANTS

Gear Unit and Motor Position – MP 1

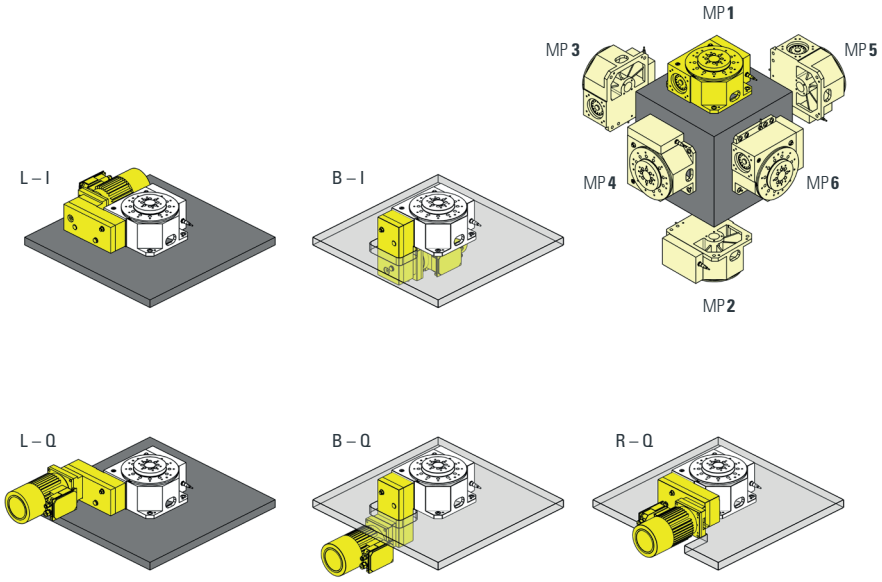

Gear Unit and Motor Position – MP 2

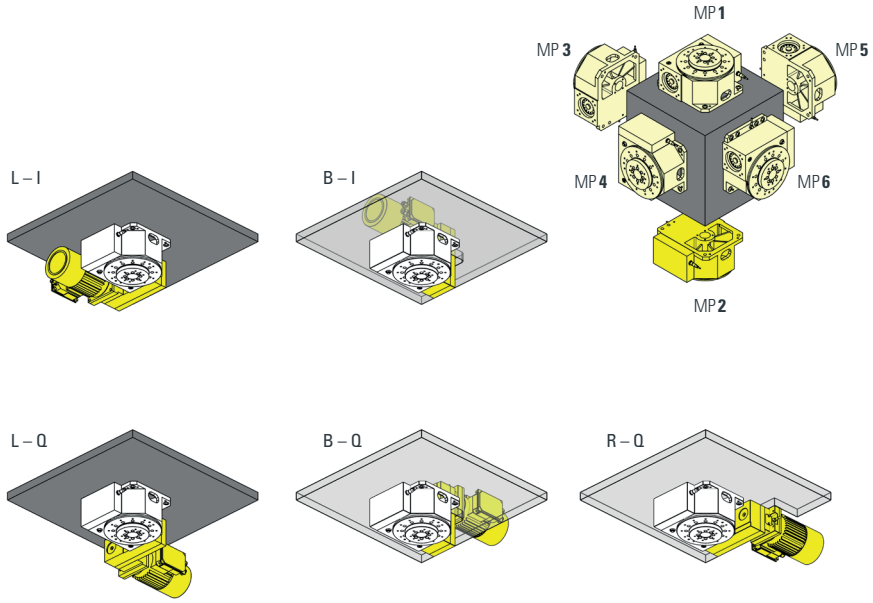

VARIANTS

Gear Unit and Motor Position – MP 3

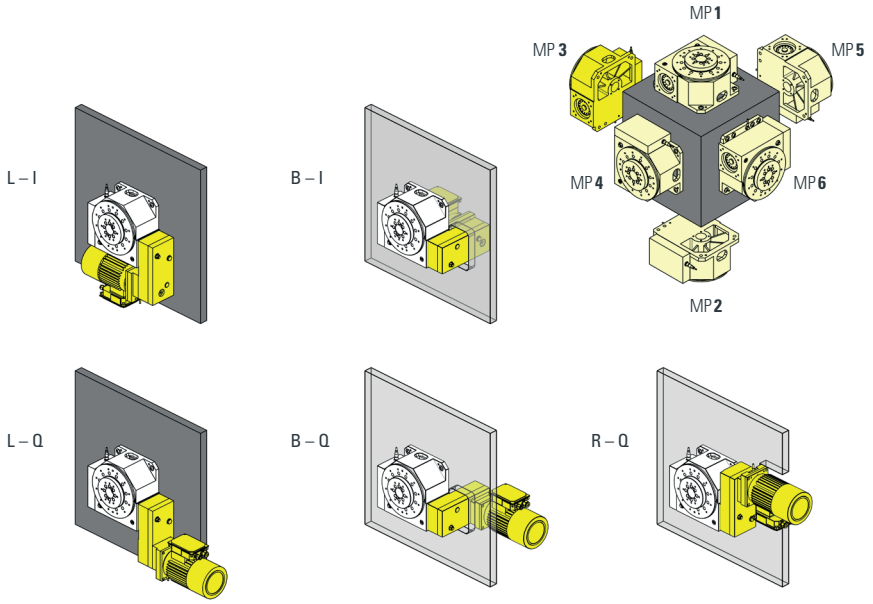

Gear Unit and Motor Position – MP 4

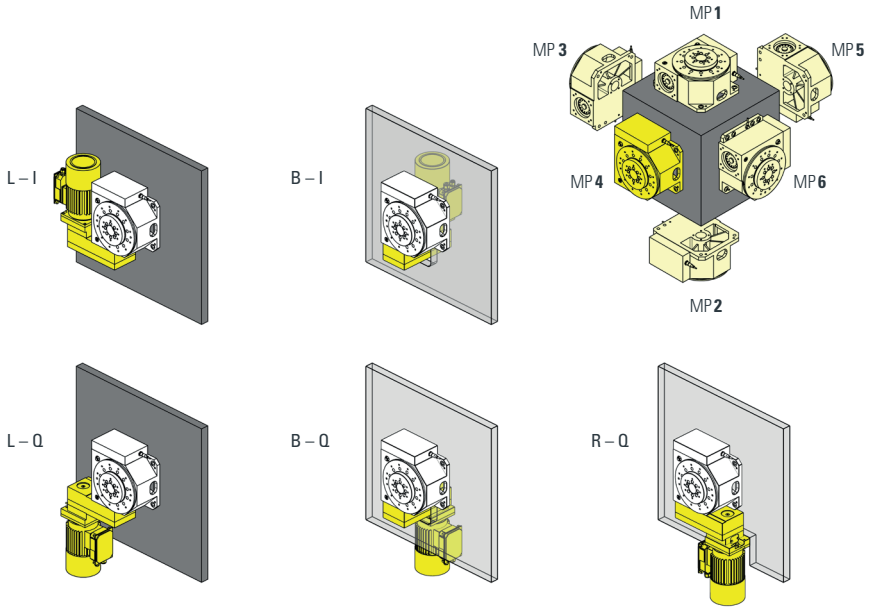

VARIANTS

Gear Unit and Motor Position – MP 5

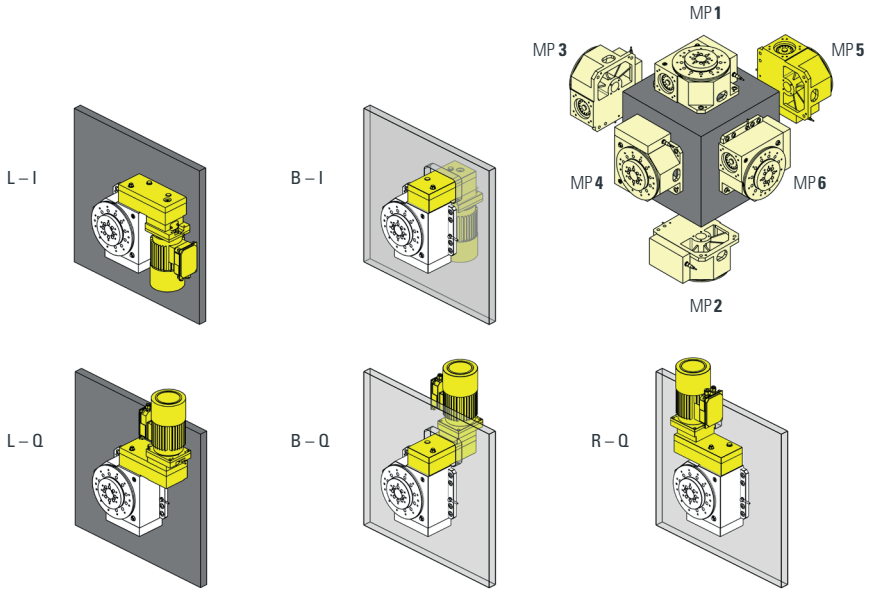

Gear Stages – Optimal Design

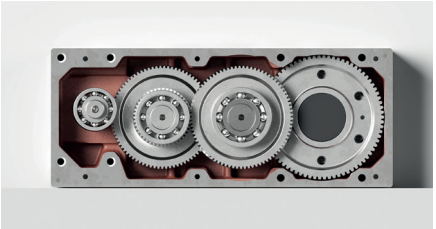

3-stage

Application-Specific Design
The various gear ratios enable efficient, optimal design of the complete drivetrain for the respective application. The combination of motor, controller, and gear unit is available in 7 stages.

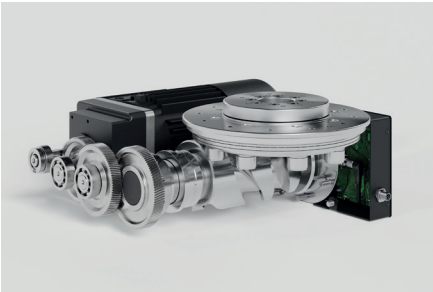

Direct and Loss-Free Power Transmission
The toothed-gear-based gear unit enables a much more direct and more rigid connection from the motor to the rotary plate. It pays off when it comes to accuracy, rigidity, and service life as well as the transmission of higher torques.

FREELY PROGRAMMABLE ROTARY INDEXING TABLE CR-N 260
TYPE CODE

CHARACTERISTIC	VALUE	DESCRIPTION
Model	CR	Freely programmable Rotary Indexing Table
Type	N	
Size	260	
Cam characteristic	K	Precision
	S	Dynamic
Gear (total ratio)	A	76.608 (9,576 : 125)
	B	161.28 (4,032 : 25)
	C	262.5 (252 : 2)
	D	319.2 (1,596 : 5)
	F	446.208 (55,776 : 125)
	G	598.08 (14,952 : 25)
	H	672
	X	special
	Z	without
Mounting position	1	horizontal
	2	overhead (after consultation)
	3	vertical, gearbox right
	4	vertical, gearbox below
	5	vertical, gearbox above
	6	vertical, gearbox left (after consultation)
Gearbox position	L	left
	B	below
	R	right
	Z	without
Drive position	I	inside
	Q	outside
	Z	without
Stationary section	H	high
	X	special
Bearing option	A	reinforced
	Z	standard
Housing option	Z	without
	X	special
Paint	S	7035
	1	7016
	2	1013
	3	9001
	4	9006
	Z	without
	X	special
Accessory 1	Z	without
Motor	B2	B&R EnDat 2.2 – single-cable solution
	R1	Rexroth – single-cable solution
	XX	special
	ZZ	without
Cam encoder	ZZ	without
	A2	EnDat 2.1 (ROQ425)
	B2	EnDat 2.2 (ROQ437)
	XX	special
Accessory 2	Z	without
Special	X	special
	Z	without
Version	00	V0

CR - N 260 - K C - 1 L I H - Z Z S Z - B2 ZZ - Z Z 00